Journal of Photochemistry, *29* (1985) 123 - 138

PROBLEMS OF BACK ELECTRON TRANSFER IN ELECTRON TRANSFER SENSITIZATION*

SHIGEO TAZUKE, NOBORU KITAMURA and YUJI KAWANISHI

Research Laboratory of Resources Utilization, Tokyo Institute of Technology, 4259 Nagatsuta, Midori-ku, Yokohama 227 (Japan)

Summary

The problems of back electron transfer in electron transfer sensitization were discussed and methods of preventing back electron transfer to improve the quantum efficiency of charge separation in homogeneous systems were proposed. Although complete quenching of an excited sensitizer by an electron donor or acceptor is not difficult, chemical yields of oxidized or reduced species are in general low. The importance of the coulombic effect was demonstrated for benzophenone/leuco crystal violet, pyrene/methylviologen (MV^{2+})/ethylenediaminetetraacetic acid and phenothiazine/viologen analogue systems. Then the discussion was extended to the quenching of $Ru(bpy)_3^{2+*}$ (bpy ≡ 2,2′-bipyridine) by organic acceptors and donors in acetonitrile. The magnitude of the quenching constant k_q as a function of exoergicity could be explainable by the Rehm–Weller equation in both cases: $\Delta H^{\ddagger}$ is apparently negative for oxidative quenching ($RuL_3^{2+*} + A \rightarrow RuL_3^{3+} + A^-$); in contrast, for reductive quenching ($RuL_3^{2+*} + D \rightarrow RuL_3^{+} + D^+$) $\Delta H^{\ddagger}$ is normal and controls k_q. A detailed kinetic mechanistic study leads to the conclusion that the attraction between RuL_3^{3+} and A^- in oxidative quenching brings about back electron transfer to the excited state, and the charge separation yield is found to be lower than that for reductive quenching as would be expected. By modulation of the ligand structure from 2,2′-bipyridine to 2,2′-bipyrazine and other ligands, the redox properties of RuL_3^{2+*} can be modified. Thus, the photoreaction of the RuL_3^{2+}/MV^{2+}/triethanolamine (TEOA) system proceeds via reductive quenching when L is 2,2-bipyrazine or some other ligands ($RuL_3^{2+*} + TEOA \rightarrow RuL_3^{+}$; $RuL_3^{+} + MV^{2+} \rightarrow RuL_3^{2+} + MV^{+}$). The quantum yield of MV^+ formation approaches 100% by tris(2,2′-bipyrazine)-ruthenium(II) whereas the conventional $Ru(bpy)_3^{2+}$ sensitizer reacting via the oxidative quenching mechanism ($RuL_3^{2+*} + MV^{2+} \rightarrow RuL_3^{3+} + MV^{+}$; $RuL_3^{3+} + TEOA \rightarrow RuL_3^{2+}$) gives a quantum yield of MV^+ formation of only about 20%.

*Paper presented at the Fifth International Conference on Photochemical Conversion and Storage of Solar Energy, Osaka, Japan, August 26 - 31, 1984.

0047-2670/85/$3.30 © Elsevier Sequoia/Printed in The Netherlands

1. Introduction

The development of an effective sensitizer for electron transfer is fundamental to the chemical conversion of solar energy. Although many problems including technological and economical aspects must be solved, the scientific problem of central importance is the improvement of the charge separation yield. Since complete quenching of an excited sensitizer is by no means difficult, the key process for efficient charge separation after primary electron transfer between an excited sensitizer and a quencher is the prevention of back electron transfer. With the aim of obtaining a high quantum yield of charge separation the following approaches have been proposed and investigated.

(i) The use of the coulombic effect on charge separation [1].

(ii) The use of interfacial reaction systems such as micelles, vesicles, membranes, colloidal particles and so forth [2 - 6] to separate the oxidation and reduction sites.

(iii) The use of sacrificial oxidants or reductants to prevent back electron transfer [7].

The problems of back electron transfer are not only crucial for the improvement of the photoredox quantum yield but are also of great concern in matching experimental rate constants with theoretical calculations. The present theories represented by the Marcus theory [8, 9] take into account the forward electron transfer process alone. The relationship between the luminescence quenching rate constant k_q and the overall change ΔG in free energy seems to be approximately consistent with theoretical predictions for the majority of measurements [10 - 13]. However, the validity of the theory should be carefully examined by analysing k_q as a function of temperature and other conditions [14]. The theoretical rate calculation is based on the assumption that k_q represents a single reaction path. This assumption has seldom been examined.

In the following sections, we shall look at the kinetic mechanistic details of photo-induced electron transfer with special reference to back electron transfer and then demonstrate that highly efficient electron transfer sensitization is possible in homogeneous systems where back electron transfer can be suppressed.

2. Qualitative results on the role of the coulombic field in suppressing back electron transfer

The generalized sketch of electron transfer sensitization shown in Fig. 1 represents five main processes. The photoexcitation 1 of a sensitizer S is followed by either oxidative or reductive quenching 2; the oxidized or reduced form of S may then be recycled to regenerate S either by process 3 or by process 5. Process 3 (back electron transfer) competes with the product-forming process 4 and the forward electron transfer process 5.

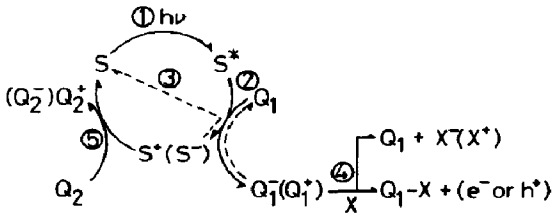

Fig. 1. A generalized sketch of electron transfer sensitization.

If process 3 dominates over processes 4 and 5, no net chemical reaction is observed and the absorbed photoenergy is merely thermalized.

There are many examples of low efficiency electron transfer sensitization. When an aromatic hydrocarbon such as pyrene or perylene (S) in acetonitrile (CH_3CN) is irradiated in the presence of leuco crystal violet (LCV) (Q_1) and 1,4-dicyanobenzene (DCB) (Q_2) *in vacuo*, the recycling of S is perfect and the fluorescence of S is effectively quenched whereas the quantum yield ϕ_{CV^+} of LCV oxidation to the crystal violet cation (LCV^+) is less than 10^{-2} [15]. In addition to aromatic hydrocarbons, benzophenone (BP) as a triplet oxidizing sensitizer is also capable of photo-oxidizing LCV [1]. The quantum yield ϕ_{CV^+} is only 0.026 and the major fraction of the photoenergy is dissipated for nothing. The introduction of a quaternary ammonium ion to the 4 position of BP as a substituent (R) brings about a drastic increase in ϕ_{CV^+} as shown in Table 1, where $R \equiv -CH_2\overset{+}{N}(C_2H_5)_3 \cdot Cl^-$, $R \equiv -CH_2\overset{+}{N}(C_2H_5)_3 \cdot Br^-$, $R \equiv -CH_2\overset{+}{N}(CH_3)_2(CH_2)_{11}CH_3 \cdot Br^-$ and $R \equiv -O(CH_2)_{10}\overset{+}{N}(CH_3)_3 \cdot Br^-$ for BP derivatives I, II, III and IV respectively. Since the theoretical maximum of ϕ_{CV^+} is 0.5 [16], practically quantitative photo-oxidation of LCV becomes possible. This coulombic

TABLE 1

Photo-oxidation quantum yields in the various sensitizing systems

System	*Quantum yield*	
	In air	*In N_2*
BP	0.026	≈0
I	0.286	0.420
II	0.092	0.111
III	0.083	0.097
IV	0.030	≈0
BP + n-Bu_4NClO_4	0.032	≈0
BP + n-Bu_4NCl	0.107	≈0
BP + CTAC	0.106	≈0
BP + CTAB	0.061	≈0

Bu, butyl; CTAB, cetyltrimethylammonium bromide; CTAC, cetyltrimethylammonium chloride.
$[BP] = 1 \times 10^{-3}$ M; $[R_4NX] = 1 \times 10^{-3}$ M; $[LCV] = 3 \times 10^{-4}$ M in CH_3CN.
For the numbering of the BP derivatives see text.

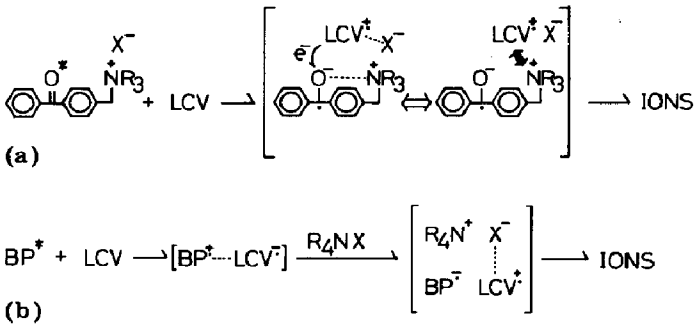

Fig. 2. Schematic representation of the effects of an ionic atmosphere on the photo-oxidation of LCV (a) in the system cationic BP derivatives/LCV and (b) in the system BP/LCV/R_4NX.

effect is explained in Fig. 2. Coulombic repulsive interaction between $-\overset{+}{N}R_3$ and $LCV^{+\cdot}$ as well as stabilization of $BP^{-\cdot}$ by the cationic quaternary ammonium ion are the reasons for the high value of ϕ_{CV^+}. When the quaternary ammonium group is attached to BP via a long methylene chain, the positive coulombic effect on ϕ_{CV^+} decreases. If the coulombic attraction between $BP^{-\cdot}$ and $LCV^{+\cdot}$ is the main driving force of process 3 in Fig. 1, the addition of a neutral salt will reduce the coulombic effect. This is indeed the case. An increase in ϕ_{CV^+} is observed when quaternary ammonium salts ($R_4\overset{+}{N}X^-$) are added, as shown in Table 1.

Electron transfer sensitization systems consist of at least three components. The third component in the BP/LCV combination is oxygen in air. Although recycling of BP was not confirmed, oxygen is supposed to act as an oxidant to $BP^{-\cdot}$. In an evacuated system, unsubstituted BP is an inert sensitizer for the oxidation of LCV. The BP which has an $-\overset{+}{N}R_3$ substituent, however, photo-oxidizes LCV with a yield which is even better *in vacuo* than it is in air. This reversed oxygen effect is not observed when quaternary ammonium salts are added externally. The role of quaternary ammonium salts is in part attributed to the common salt effect and in part to the formation of specific zwitterionic structures which prevent back electron transfer. The stabilization effect is particularly large when the distance between BP and $-\overset{+}{N}R_3$ is small, as shown in Table 1 [17]. The ratio of ϕ_{CV^+} in N_2 to ϕ_{CV^+} in air decreases with increasing spacer length between BP and $-\overset{+}{N}R_3$.

To avoid the complexity of the oxygen effect, we examined the coulombic effect on singlet sensitizers. When anthracene (An) or pyrene is bonded to polycations or their monomer model compounds, these sensitizers are much more effective than their neutral analogues in the photoreduction of methylviologen (MV^{2+}) by ethylenediaminetetraacetic acid (edta) in aqueous solution [18]. Examples are given in Fig. 3. The effect of coulombic repulsion is apparent. It should be noted that the coulombic effect is more prominent in the back electron transfer process, *i.e.* the forward process (fluorescence quenching) is certainly retarded when both

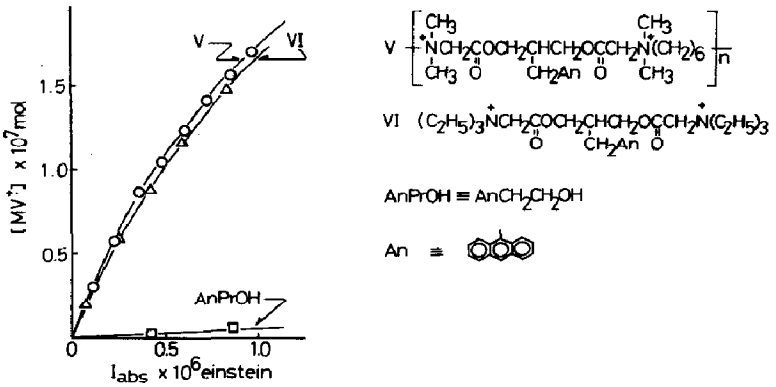

Fig. 3. Ionic atmospheric effects on the photoreduction of MV^{2+} ([MV^{2+}] = 1.0 × 10^{-4} M; [edta] = 1.0 × 10^{-3} M; [V] = 1.2 × 10^{-4} M; [VI] = 1.2 × 10^{-4} M; [AnPrOH] = 1.7 × 10^{-4} M; irradiation at 358 nm).

the fluorescer (the sensitizer) and the quencher (in this case MV^{2+}) are positively charged. Furthermore, the repulsive force is stronger than that after electron transfer from S to MV^{2+}. Nevertheless, the coulombic effect on back electron transfer overwhelms the retardation of the forward process. When the forward process is exoergic, the rate is diffusion limited. Coulombic effects on diffusion processes and on chemical activation (*i.e.* $\Delta H^{\ddagger}$-controlled processes) are different, as will be discussed in later sections.

The data in Table 2 present clear support for what we have discussed above. The anionically charged sensitizer is very effectively quenched by MV^{2+}. The Stern–Volmer plots are not linear, indicating the participation of static quenching. The K_q value for the anionic sensitizer is therefore

TABLE 2

Quenching of pyrene fluorescence by MV^{2+} and the quantum yield of $MV^{\cdot+}$ formation

Sensitizer	K_q (M^{-1})	$\phi_{MV^{\cdot+}}$
VII	17.5	0.061
VIII	2 × 10^4	0.00

[Py] = 5 × 10^{-5} M; [edta] = 1 × 10^{-3} M; [MV^{2+}] = 5 × 10^{-4} M in water.
Et, ethyl; Ph, phenyl.

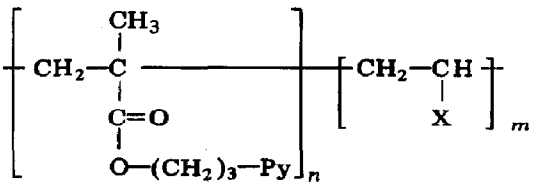

VII X ≡ $-PhCH_2N^+Et_3Cl^-$
VIII X ≡ $-Ph-SO_3^-Na^+$

an approximate value obtained from the initial slope. The K_q value of 2×10^4 M^{-1} for the 1-pyrenyl group (Py) corresponds to a quenching rate constant of 10^{11} - 10^{12} M^{-1} s^{-1} where τ_f is of the order of 10^2 ns. The k_q value well exceeds the diffusion limit. This efficient quenching does not result in any reduction of MV^{2+}. On the contrary, inefficient quenching of the cationic sensitizer (VII) by MV^{2+} results in a moderate yield of MV^{+} formation. These sequences are explained in Fig. 4. Anionically charged edta stays in the periphery of the cationic polymer but does not quench the excited singlet state of pyrene. When electron transfer proceeds between MV^{2+} and Py^{*1}, although the probability is low, Py^{+} is immediately deactivated by edta so that MV^{+} is liberated. For the anionic sensitizer, fast fluorescence quenching is linked to fast back electron transfer and no net reaction is observed.

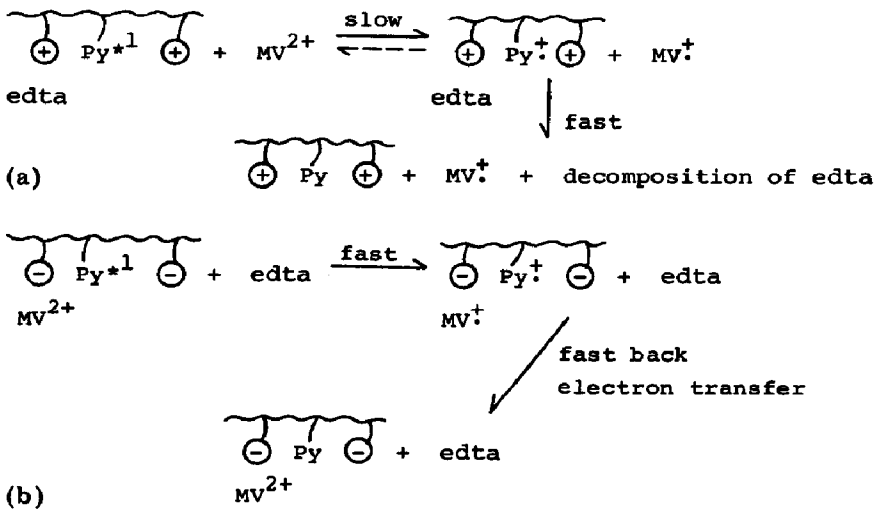

Fig. 4. Schematic representation of the effects of an ionic atmosphere on the photoreduction of MV^{2+} (a) in the cationically charged polymer and (b) in the anionically charged polymer.

3. Kinetic expression

For the purpose of the discussion in Section 4 the established kinetic expressions and reaction sequence for the electron transfer (quenching) reaction are given below:

$$S^* + Q \underset{k_{21}}{\overset{k_{12}}{\rightleftharpoons}} (S^* \text{----} Q) \underset{k_{32}}{\overset{k_{23}}{\rightleftharpoons}} (S^{\pm} \text{----} Q^{\mp}) \xrightarrow{k_{30}} \xrightarrow{k_p} S^{\pm} + Q^{\mp} \qquad (1)$$

$$\xrightarrow{k_b} S + Q$$

1 2 3 0

where (S^*---Q) is the encounter complex in which there is no electrostatic interaction between S^* and Q (k_{12} is therefore a diffusion-limited rate constant) and ($S^{\pm}$---$Q^{\mp}$) is the ion pair state fully solvated and ready for dissociation. The process 2 → 3 includes the processes of charging up to and relaxation from energy-matched states and electron tunnelling between them according to Marcus [8].

Stationary kinetic treatment leads to the following equation:

$$k_q = \frac{k_{12}}{1 + k_{21}/k_{23} + (k_{21}/k_{30})(k_{32}/k_{23})} \tag{2}$$

When the back reaction does not participate (case I) ($k_{32} \ll k_{30}$, $k_{21} \gg k_{23}$),

$$k_q = \frac{k_{12}}{k_{21}} k_{23} \tag{3}$$

When the back reaction is not negligible (case II) ($k_{32} \gg k_{30}$, $k_{21} \gtrsim k_{23}$),

$$k_q = \frac{k_{12} k_{23} k_{30}}{k_{21} k_{32}} \tag{4}$$

4. Coulombic effects on the phenothiazine/methylviologen system [19]

The singlet excited state of phenothiazine (PTH) is capable of reducing MV^{2+} to give $MV^{\cdot+}$ [20]. We prepared five *N*-substituted PTHs (substituent R): uncharged MPTH (R ≡ $-CH_3$), cationically charged QPTH3 (R ≡ $-(CH_2)_3\overset{+}{N}(C_2H_5)_3Cl^-$) and QPTH6 (R ≡ $-(CH_2)_6\overset{+}{N}(C_2H_5)_3Cl^-$), and anionically charged SPTH3 (R ≡ $-(CH_2)_3SO_3^-Na^+$) and SPTH6 (R ≡ $-(CH_2)_6$-$SO_3^-Na^+$). In combination with MV^{2+} or 4,4′-bipyridinium-1,1′-bis(ethylsulphonate) (SV^0), the effects of coulombic work terms on photoredox reactions were studied. The spectroscopic properties of PTH (the absorption and fluorescence spectra and their intensity, the quantum yield and the lifetime of the excited state) are almost unaffected by cationic or anionic substituents and, consequently, differences in k_q and $\phi_{MV^{\cdot+}}$ for various combinations of PTH derivatives and viologens are attributed to coulombic effects.

The free-energy difference between 2 and 3 in eqn. (1) is then given by

$$\Delta G_{23}\ (\text{kcal mol}^{-1}) = 23.06\{E^\circ(D^+|D) - E^\circ(A|A^-) - \Delta E^{0\text{-}0}\} + w_p - w_r \tag{5}$$

where $E^\circ(D^+|D)$ and $E^\circ(A|A^-)$ are the redox potentials of PTH and viologen, $\Delta E^{0\text{-}0}$ is the electronic excitation energy of PTH, and w_r and w_p are the coulombic work terms for bringing the reactants and the products respectively from infinite separation. Thus, the experimental rate constant k_q can be expressed as a function of the free-energy change ΔG_{23}:

$$k_q = \frac{k_{12}}{1 + k_{21}/k_{23} + (k_{21}/k_{30}) \exp(\Delta G_{23}/RT)} \tag{6}$$

TABLE 3

Fluorescence quenching rate constants k_q and ratios k_p/k_b in phenothiazine/viologen systems

Run		*Work terms* (kcal mol^{-1})[a]			10^{-10} k_q (M^{-1} s^{-1})	k_p/k_b [b]
		w_r	w_p	$w_p - w_r$		
In CH_3CN:H_2O (4:1)						
1	MPTH/MV^{2+}	0.00	0.63	0.63	1.8	0.031
2	QPTH3/MV^{2+}	1.27	1.27	0.00	0.84	0.081
3	QPTH6/MV^{2+}	1.27	1.27	0.00	0.79	0.076
4	SPTH3/MV^{2+}	−1.27	0.00	1.27	7.1	0.009
5	SPTH6/MV^{2+}	−1.27	0.00	1.27	5.3	0.012
In CH_3CN:H_2O (1:1)						
6	MPTH/MV^{2+}	0.00	0.52	0.52	1.3	0.007
7	MPTH/SV^0	0.00	−0.52	−0.52	1.2	0.021
8	QPTH3/SV^0	0.00	−1.04	−1.04	0.92	0.054
9	SPTH3/SV^0	0.00	0.00	0.00	1.3	0.015

[a] At 298 K, $\mu = 1.5 \times 10^{-2}$ M and $r = 8 \times 10^{-8}$ cm.
[b] Calculated from eqn. (11) with the observed values of ϕ and E_q.

The observed k_q values are shown in Table 3. The quenching process is apparently diffusion controlled. The diffusion rate under the influence of the coulombic effect is given by the following equation in conditions of low ionic strength [21]:

$$k_{diff} = \frac{4\pi r N(D_A + D_B)}{1000} \frac{w_r/RT}{\exp(w_r/RT) - 1} \tag{7}$$

where r, N and D_A (or D_B) are the distance between ions, the Avogadro number and the diffusion constant of species A (or species B) respectively. The data of Table 3 are plotted in Fig. 5 according to eqn. (7) on the assumption that $k_q = k_{diff}$ and that r and D are constant for all runs. The

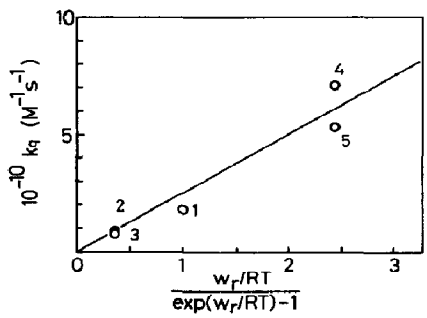

Fig. 5. Plots of k_q *vs.* $(w_r/RT)/\{\exp(w_r/RT) - 1\}$ for PTH/MV^{2+} systems in a CH_3CN:H_2O (4:1) mixture (for the numbering of the PTH derivatives see Table 3): ——, calculated from eqn. (7) for $r = 8 \times 10^{-8}$ cm, $D_A + D_B = 4 \times 10^{-5}$ cm^{-2} s^{-1} and $T = 298$ K.

plots fall almost on a straight line. The somewhat higher values of k_q in runs 2 and 4 in comparison with those in runs 3 and 5 might be reflections of the fact that QPTH3 is smaller in size than QPTH6. When viologen with no formal charge was used, $w_r = 0$ and a constant k_q was observed regardless of PTH derivatives.

The efficiency ϕ of formation of the viologen cation radical is also dependent on the work terms. Since the fluorescence quenching process is affected by the work terms, the value of ϕ should be corrected for quenching efficiency E_q. The quenching efficiency and ϕ are expressed as follows:

$$E_q = \frac{k_q\tau[Q]}{1 + k_q\tau[Q]} \tag{8}$$

$$\phi = \frac{Fk_{12}k_{23}k_{30}\tau[Q]}{k_{21}(k_{32} + k_{30}) + k_{23}k_{30} + k_{12}k_{23}k_{30}\tau[Q]} \tag{9}$$

$$F = \frac{k_p}{k_p + k_b} \tag{10}$$

The following equation is derived from eqns. (8) - (10):

$$\left(\frac{E_q}{\phi} - 1\right)^{-1} = \frac{k_p}{k_b} \tag{11}$$

The back electron transfer to the ground state is exoergic by approximately -30 kcal mol^{-1} so that little activation energy will be required in the back electron transfer. Nevertheless, k_b seems to be controlled by $w_p - w_r$. Since the product-forming process is diffusion controlled, it does not require activation and will be independent of the work term. The plots of $\log(k_p/k_b)$ *versus* $w_p - w_r$ fall on a straight line as shown in Fig. 6. If the work terms fully reflect $\Delta G^{\ddagger}$, the slope of the line plotted in Fig. 6 should be equal to $-(2.303RT)^{-1}$. The value is -0.73 at 25 °C, which agrees very well with the observed value of -0.69.

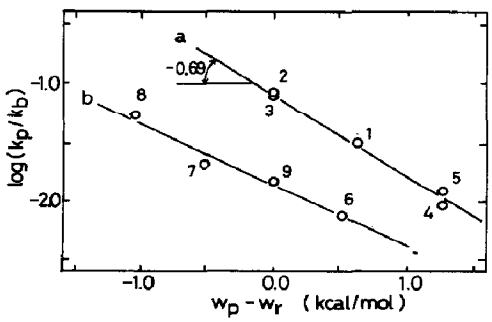

Fig. 6. Plots of $\log(k_p/k_b)$ *vs.* $w_p - w_r$ ([PTH derivative] = 5.0×10^{-4} M; [viologen analogue] = 5.0×10^{-3} M; for the numbering of the PTH derivatives see Table 3): curve a, in a $CH_3CN:H_2O$ (4:1) mixture; curve b, in a $CH_3CN:H_2O$ (1:1) mixture.

The present results indicate that the efficiency of charge separation after forward electron transfer is determined by the ease of back electron transfer. The exoergic back electron transfer is fast but is an activation-controlled process. This process proceeds with a rate comparable to that of dissociation of an ion pair. In Section 5 we shall discuss the problem of back electron transfer to the excited state.

5. Kinetic mechanistic details of the redox photochemistry of a ruthenium(II) complex [14, 22]

Tris(2,2′-bipyridine)ruthenium(II) ($Ru(bpy)_3^{2+}$), as the most popular photosensitizer in water splitting, has been extensively studied [23]. The results have been interpreted or explained within the framework of Marcus' formulation. However, in the context of the discussion in the preceding sections, we are doubtful about the applicability of Marcus' theory in the photochemistry of ruthenium(II). Both oxidative and reductive quenching of the excited ruthenium(II) complex are possible and the ease of back electron transfer and separation of the products would depend on the quenching mechanism. When excited $Ru(bpy)_3^{2+}$ is quenched by neutral acceptors such as aromatic nitro or cyano compounds, the resultant species are tripositive and single-negative species which are strongly attracting. In contrast, when the same complex is quenched by neutral donors such as amines, the products repel each other. We examined electron transfer quenching of excited $Ru(bpy)_3^{2+}$ by 13 donors and 13 acceptors and the quenching rate constants are plotted as a function of ΔG in Fig. 7. The full line is that calculated from the Rehm–Weller empirical equation [9]. At first glance, the behaviour of the donors and acceptors looks indistinguishable.

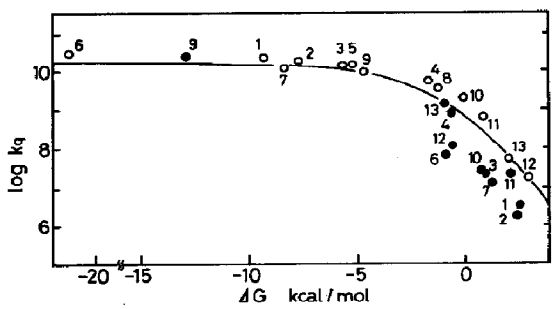

Fig. 7. Correlation between the quenching rate constants k_q and the free energy change ΔG in CH_3CN at 25 °C: ——, Rehm–Weller equation; ○, electron acceptor (*p*-benzoquinone (1); *p*-toluquinone (2); *p*-xyloquinone (3); duroquinone (4); 1,4-naphthoquinone (5); chloranil (6); pyromellitic dianhydride (7); tetrachlorophthalic anhydride (8); 1,2,4,5-tetracyanobenzene (9); *m*-dinitrobenzene (10); *p*-nitromethylbenzoate (11); *m*-nitromethylbenzoate (12); 4,4′-dinitrobiphenyl (13)); ●, electron donor (*o*-toluidine (1); *m*-toluidine (2); *p*-toluidine (3); *p*-anisidine (4); *o*-anisidine (5); 2,4-dimethylaniline (6); 2,5-dimethylaniline (7); 2,6-dimethylaniline (8); *p*-phenylenediamine (9); *N*-methylaniline (10); diphenylamine (11); *N,N*-dimethylaniline (12); *N,N*-dimethyl-*p*-toluidine (13)).

Although the curve fitting is not particularly good, there is no evidence to support a proposal for different reaction mechanisms for oxidative and reductive quenching. Calculation using the Marcus theory results in a curve for $\Delta G > -10$ kcal mol^{-1} comparable with that in Fig. 7.

We have obtained evidence confirming that the contribution of back electron transfer cannot be neglected, at least for oxidative quenching. As shown in Fig. 8, an apparent negative temperature dependence of k_q is observed when electron acceptors are used as quenchers. The k_q values were calculated from the Stern–Volmer quenching constant K_q on the basis of emission intensity measurements and the lifetime of the excited ruthenium(II) complex at the relevant temperature. This corresponds to case II (eqn. (4)), and the large activation energy required for back electron transfer to regenerate the excited ruthenium(II) complex accounts for the results. It is striking that $\Delta H^{\ddagger}$ becomes more and more negative when k_q decreases, *i.e.* changes in $\Delta G^{\ddagger}$ and $\Delta H^{\ddagger}$ are opposing each other. In contrast, $\Delta S^{\ddagger}$ is large and negative and furthermore the range of $\Delta S^{\ddagger}$ is nearly 40 cal mol^{-1} K^{-1}. The reaction is therefore entropy controlled.

The donor quenching systems look normal. The reaction is a normal enthalpy-controlled system and the entropy term is fairly constant. However, it is still uncertain whether case I (eqn. (3)) can explain the donor quenching.

The large and negative value of $\Delta S^{\ddagger}$ in acceptor quenching seems to be relevant to the large loss of solvation entropy during the transition from 2 to 3 in eqn. (1). With decreasing acceptor strength, the structure of 3 will become more like that of a discrete ion pair. This may be understood by analogy with the known fact that the weaker the ground state electron donor–acceptor interaction the stronger the polarization in the excited state, as manifested by more efficient charge separation via an exciplex than via excitation of the strong electron donor–acceptor complex [24]. When a discrete $[Ru(III)]^{3+}$--A^- pair is formed, both ΔH_{23} and ΔS_{23} (ΔH and ΔS for the equilibrium $2 \rightleftharpoons 3$) become more negative. Effective charge separation is therefore not expected from oxidative quenching of $Ru(bpy)_3^{2+}$.

The problems of back electron transfer are further substantiated by the investigation of neutral salt effects. The ionic strength effects which can be explained using the Debye–Hückel equation will not be observed

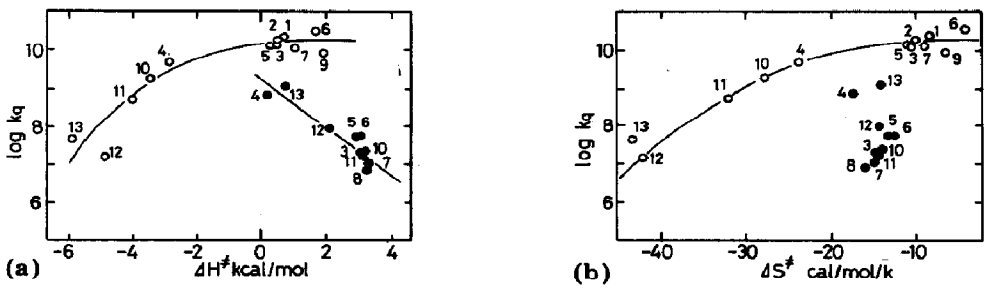

Fig. 8. Plots of (a) log k_q *vs.* $\Delta H^{\ddagger}$ and (b) log k_q *vs.* $\Delta S^{\ddagger}$ (for the numbering of the quenchers see Fig. 7): ○, electron acceptor; ●, electron donor.

in the present quenching experiments provided that reverse processes do not participate. In practice, neutral salt effects are confirmed for the reactions between $Ru(bpy)_3^{2+}$ and neutral donors or acceptors [22]. The addition of tetraethylammonium perchlorate retards k_{32} for acceptor quenching. The sequences and their interpretation are shown below:

$$RuL_3^{2+*} + A \underset{21}{\overset{12}{\rightleftharpoons}} (RuL_3^{2+*}\text{----}A) \underset{32}{\overset{23}{\rightleftharpoons}} (RuL_3^{3+}\text{----}A^-) \xrightarrow{30} RuL_3^{3+} + A^-$$

$$\text{increase in } \mu \Big\downarrow \quad \text{increase in } k_q$$

$$RuL_3^{2+*} + A \rightleftharpoons (RuL_3^{2+*}\text{----}A) \rightleftharpoons (RuL_3^{3+}\text{----}A^-) \longrightarrow RuL_3^{3+} + A^-$$

The effects of salts on the donor quenching system are positive and difficult to explain. One possibility is that k_{30} is slowed down and that this is followed by the participation of reverse reactions. Although the detailed interpretation of salt effects in donor quenching systems is a problem still to be solved, reverse processes will be neglected in the hope of fitting data to the present theories after measuring the thermodynamic parameters and examining the salt effects.

The examination of the effects of salts on excited state electron transfer is a useful approach to the qualitative interpretation of back electron transfer. When we try to make quantitative measurements, we encounter many unsolved problems. First, the Debye–Hückel equation is for an equilibrium system where cluster formation is complete. In the excited state we are not sure whether the lifetimes of the ion pair and the transient ions are sufficiently long to ensure cluster formation around the ions. The rate of ion cluster formation is a subject which has not hitherto been investigated. Our preliminary results indicate that the slopes of plots of log k_q *versus* the square root of the ionic strength are only about 10% of the predicted value. This might mean incomplete cluster formation. Also, the possibility of ion pair formation which alters the reactivity of RuL_3^{2+} cannot be neglected, particularly in CH_3CN. The extent of ion pair formation is affected by temperature and ionic strength and therefore might be in part responsible for the temperature and ionic strength effects on k_q. This point requires further study.

6. Ways of improving the efficiency of charge separation

We have shown that the participation of back electron transfer can be reduced by appropriate use of the coulombic effect and that the coulombic effect is more powerful in back electron transfer which requires activation energy than in diffusion-controlled forward reaction. However, the contribution of the coulombic work term to the activation free energy is of the order of several kilocalories per mole which is generally not sufficient to eliminate the participation of back electron transfer completely. In addition to favourable coulombic effects, the removal of oxidized or reduced species

from the reaction system will be a reasonable approach to high quantum efficiency. When the reactants decompose quickly after receiving or donating one electron, back electron transfer can be prevented.

Let us consider the photoreduction of MV^{2+} by $Ru(bpy)_3^{2+}$ with the aid of sacrificial reagents such as triethanolamine (TEOA) or edta. The value of ϕ_{MV^+} is about 0.2 [25], indicating possible participation of back electron transfer. The reaction proceeds via oxidative quenching of excited $Ru(bpy)_3^{2+}$ by MV^{2+} followed by the reduction of ruthenium(III) species back to ruthenium(II) by the sacrificial reductants:

$$Ru(bpy)_3^{2+*} + MV^{2+} \rightleftharpoons Ru(bpy)_3^{3+} + MV^+ \quad (12)$$

$$Ru(bpy)_3^{3+} + TEOA \longrightarrow Ru(bpy)_3^{2+} + \text{decomposition products} \quad (13)$$

The problem is that we cannot avoid the reverse process of eqn. (12) whereas eqn. (13) is completely irreversible. If we can introduce reductive quenching of ruthenium(II) by sacrificial reagents to obtain a ruthenium(I) species with a good yield, the resulting ruthenium(I) complex will be capable of reducing MV^{2+} thermally irreversibly. If this is possible, the sensitizer will be recycled via Ru(II)* → Ru(I) → Ru(II) rather than via the more conventional pathway of Ru(II)* → Ru(III) → Ru(II):

$$Ru(II)^* + TEOA \longrightarrow Ru(I) + \text{decomposition products} \quad (14)$$

$$Ru(I) + MV^{2+} \longrightarrow Ru(II) + MV^+ \quad (15)$$

The reaction pathway is determined by the relative magnitudes of the rates of oxidative and reductive quenching. Important quantities are $E_{1/2}(Ru(III)|Ru(II)^*)$ as well as $E_{1/2}(Ru(II)^*|Ru(I))$ which govern the overall value of ΔG according to eqn. (5). With 2,2′-bipyrazine as the ligand, Ru(II)* does react with TEOA but not with MV^{2+}. Thus, it is necessary to design the ligand to shift the redox potential of the ruthenium(II) complex [26, 27]. The ground and excited state redox potentials of some RuL_3^{2+} complexes are shown in Fig. 9.

Figure 10 shows the orbital energy diagram of an RuL_3^{2+} complex possessing a D_3 symmetry which is an accepted model for $Ru(bpy)_3^{2+}$. Since the lowest unoccupied molecular orbital of the RuL_3^{2+} complex is a ligand $a_2(\pi^*)$ orbital, the reduction potential of RuL_3^{2+} will be controlled by the electron-accepting ability, *i.e.* the reduction potential of the ligand. In contrast, the highest occupied molecular orbital of RuL_3^{2+} should be the metal $a_1(d)$ orbital which is a function of the amount of electron flow from the ligand σ orbital, and therefore the oxidation potential of RuL_3^{2+} will be related to the electron-donating ability, *i.e.* the pK_b value of the ligand. The two points mentioned above are good guidelines for the design not only of the redox potentials but also of the metal–ligand charge transfer (MLCT) transition energies of RuL_3^{2+} complexes. The long wavelength excitation of RuL_3^{2+} complexes induces the d–π^* (MLCT) transitions. The MLCT transition energy should correspond to the energy difference

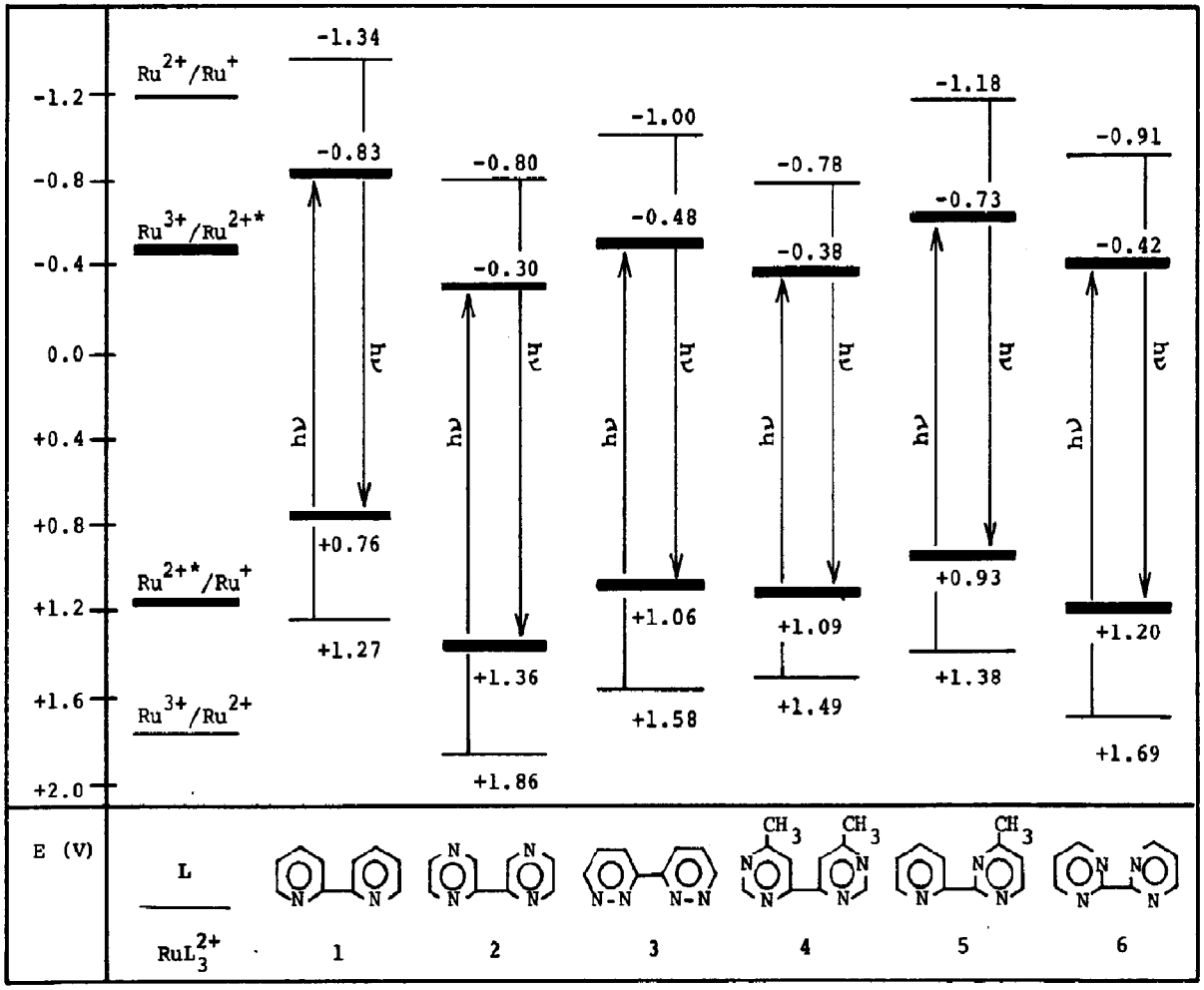

Fig. 9. Excited state redox properties of RuL_3^{2+} complexes (for complexes 1 - 5 E is measured with respect to a standard calomel electrode; for complex 6 E is measured with respect to a standard saturated calomel electrode) (see ref. 26).

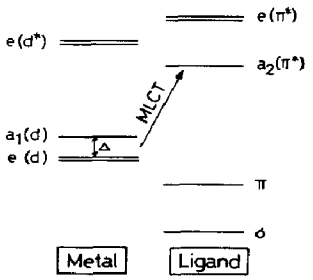

Fig. 10. Orbital energy diagram of an RuL_3^{2+} complex possessing a D_3 symmetry: Δ, trigonal splitting.

between the ligand π^* orbital and the metal d orbital, *i.e.* $E_{1/2}$(Ru(III)|Ru(II)) − $E_{1/2}$(Ru(II)|Ru(I)). Since the redox potentials of the RuL_3^{2+} complex are related to the physical properties of the free ligands, tuning of the MLCT transition energy is also possible.

A tendency for higher values of ϕ_{MV^+} is observed when Ru(II)* is first reacted with TEOA and the ruthenium(I) species reacts smoothly with MV^{2+} (Table 4). Thus, nearly 100% efficiency was achieved using tris(2,2′-bipyrazine)ruthenium(II) or tris(2,2′-bipyrimidine)ruthenium(II), which shows 10^3 times higher reactivity to TEOA than to MV^{2+}.

The results are very encouraging. Complete utilization of an excited sensitizer is now possible in homogeneous solutions when back electron transfer is prevented.

TABLE 4

Quantum yields of MV^{2+} photoreduction and rate constants for the quenching of RuL_3^{2+*} emission by MV^{2+} and triethanolamine

RuL_3^{2+}	ϕ_{vac}	ϕ_{N_2}	k_q (M^{-1} s^{-1}) *for the following quenchers*	
			MV^{2+}	*TEOA*
1	0.22	0.19	2.1×10^9	[a]
2	0.98	0.75	8.6×10^6	2.5×10^8
3	0.27	0.16	7.6×10^7	1.3×10^6
4	0.03	—	[b]	[b]
5	0.02	—	3.9×10^8	[a]
6	0.85	0.44	[a]	3.6×10^7

For the numbering of RuL_3^{2+} complexes see Fig. 9.
[a]No emission quenching was observed in the concentration regions $[MV^{2+}] < 0.02$ M or [TEOA] < 0.6 M.
[b]Not determined owing to the low emission quantum yield and the short excited lifetime.

References

1 S. Tazuke, Y. Kawasaki, N. Kitamura and T. Inoue, *Chem. Lett.*, (1980) 251.
2 B. Katušin-Ražem, M. Wong and J. K. Thomas, *J. Am. Chem. Soc.*, *100* (1978) 1679.
3 N. J. Turro, M. Grätzel and A. M. Braun, *Angew. Chem. Int. Ed. Engl.*, *19* (1980) 675.
4 J. H. Fendler, *J. Phys. Chem.*, *84* (1980) 1485.
5 P. P. Infelta and P. A. Brugger, *Chem. Phys. Lett.*, *82* (1981) 462.
6 A. Slama-Schwork, Y. Feitelson and J. Rabani, *J. Phys. Chem.*, *85* (1981) 2222.
7 N. Kitamura, Y. Kawanishi and S. Tazuke, *Chem. Lett.*, (1983) 1185.
8 R. A. Marcus, *J. Chem. Phys.*, *24* (1956) 966.
9 D. Rehm and A. Weller, *Isr. J. Chem.*, *8* (1970) 259.
10 M. Chou, C. Creutz and N. Sutin, *J. Am. Chem. Soc.*, *99* (1977) 5615.
11 H. Shizuka, M. Nakamura and T. Morita, *J. Phys. Chem.*, *84* (1980) 989.
12 B. Brunschwig and N. Sutin, *J. Am. Chem. Soc.*, *100* (1978) 7568.
13 C. R. Bock, J. A. Connor, A. R. Gutierrez, T. J. Meyer, D. G. Whitten, B. P. Sullivan and J. K. Nagle, *J. Am. Chem. Soc.*, *101* (1979) 4815.
14 N. Kitamura, S. Okano and S. Tazuke, *Chem. Phys. Lett.*, *90* (1982) 13.
15 N. Kitamura and S. Tazuke, *Bull. Chem. Soc. Jpn.*, *53* (1980) 2594.
16 A. MacLachlan, *J. Phys. Chem.*, *71* (1967) 718.
17 S. Tazuke and N. Kitamura, *Rep. Asahi Glass Found. Ind. Technol.*, *41* (1982) 133.
18 S. Tazuke, R. Takasaki, Y. Iwaya and Y. Suzuki, *Am. Chem. Soc. Symp. Ser.*, *266* (1984) 187.
19 Y. Kawanishi, N. Kitamura and S. Tazuke, unpublished, 1982.
20 J. Kiwi and M. Grätzel, *J. Am. Chem. Soc.*, *100* (1978) 6314.
21 W. Rybak, A. Haim, T. L. Netzel and N. Sutin, *J. Phys. Chem.*, *85* (1981) 2856.
22 S. Tazuke, N. Kitamura, Y. Kawanishi and S. Okano, *Abstr. 6th Int. Symp. on the Photochemistry and Photophysics of Coordination Compounds, London, July 1984*, Royal Institution of Great Britain, London, 1984, p. 32.
23 K. Kalyanasundaram, *Coord. Chem. Rev.*, *46* (1982) 159.
24 D. Mauzerall and S. G. Ballard, *Annu. Rev. Phys. Chem.*, *33* (1982) 377.
25 C. Creutz, A. D. Keller, N. Sutin and A. P. Zipp, *J. Am. Chem. Soc.*, *104* (1982) 3618.
26 D. P. Rillema, G. Allen, T. J. Meyer and D. Conrad, *Inorg. Chem.*, *22* (1983) 1617.
27 Y. Kawanishi, N. Kitamura, Y. Kim and S. Tazuke, submitted to *Sci. Pap. Inst. Phys. Chem. Res. (Jpn.)*.